PASEDO ®
Garage door components

+48 32 671 55 13 biuro@pasedo.pl www.pasedo.pl
ul. Przemysłowa 11, 42-200 Zawiercie pon-pt: 8:00 - 16:00

Shaft bracket 504086-N
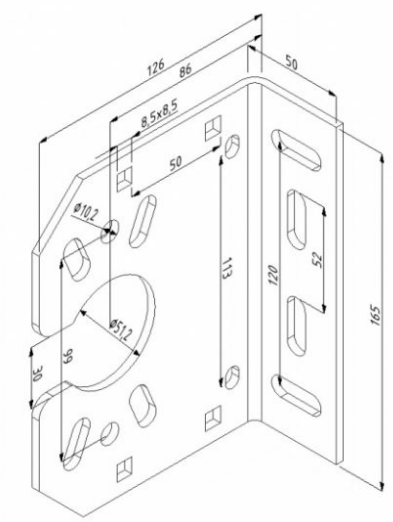
Material:	galvanized steel
Unit:	pc
Packing:	10 pc
Weight:	0,70 kg
Thickness [mm]:	4,0mm
Description:	Used in industrial doors on shaft 25,4mm. Distance from the hole axis: 86mm.