PASEDO ®
Garage door components

+48 32 671 55 13 biuro@pasedo.pl www.pasedo.pl
ul. Przemysłowa 11, 42-200 Zawiercie pon-pt: 8:00 - 16:00

Track with curve 383 industrial with inclination

Material: galvanized steel

Unit: pair

Packing: 25 pair

Thickness [mm]: 2,0 mm

Description: Used in industrial doors with inclination - sloping roof.
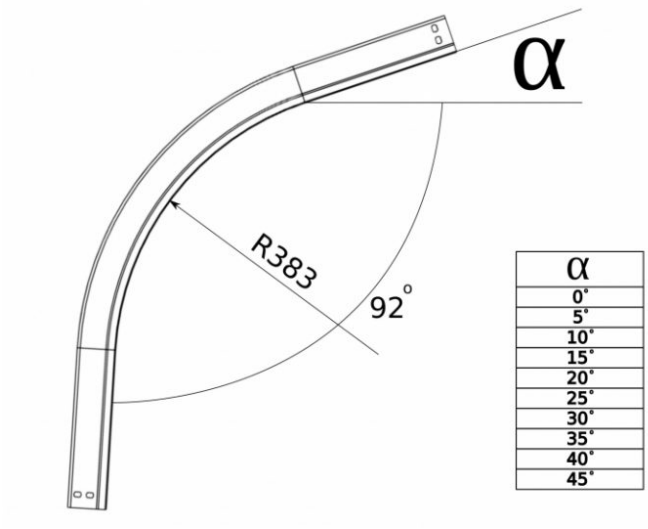
Symbol:	Length L [mm]:	Weight [kg]:
1120R383-5		
1120R383-10		
1120R383-15		
1120R383-20		
1120R383-25		
1120R383-30		
1120R383-35		
1120R383-40		
1120R383-45