Side and bottom profile 22A3B7000

Material: anodized aluminium

Unit: pc

Packing: 10 pc

Description: Glazed sections - side and bottom profile for panel 40 mm.
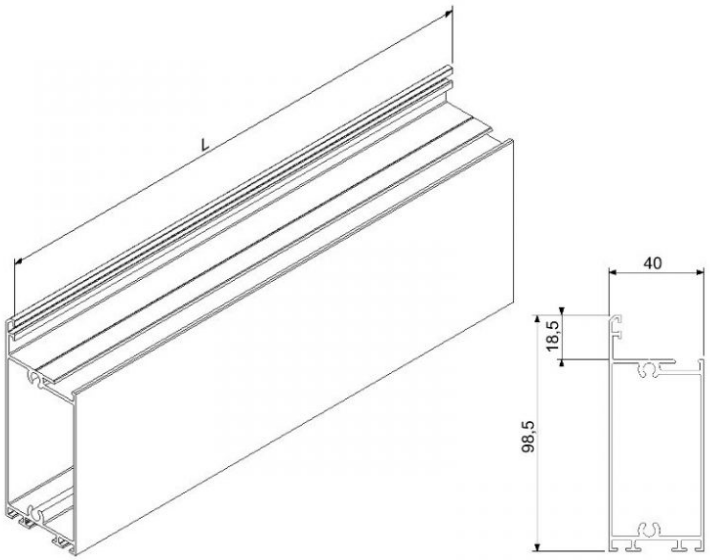
Symbol:	Length L [mm]:	Weight [kg]:	Type:
22A3B7000	7000	9,51	Anode