+48 32 671 55 13 biuro@pasedo.pl www.pasedo.pl
ul. Przemysłowa 11, 42-200 Zawiercie pon-pt: 8:00 - 16:00

Side and bottom profile 22A3B7000

Material: anodized aluminium

Unit: pc

Packing: 10 pc

Description: Glazed sections - side and bottom profile for panel 40 mm.
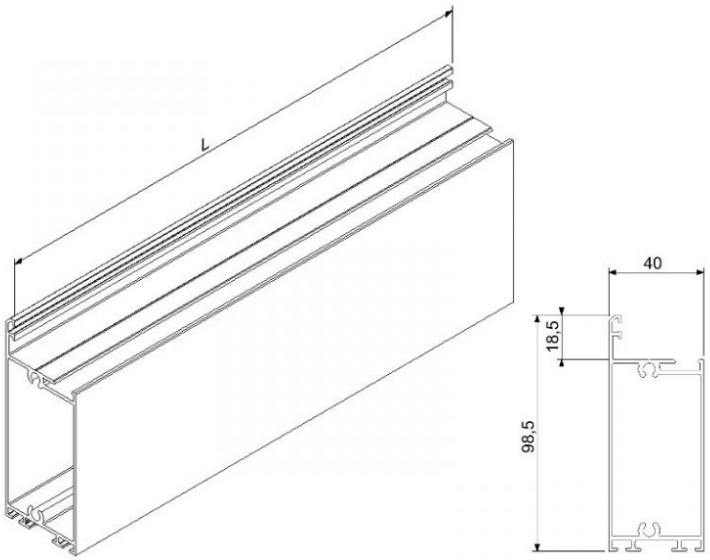
Symbol:	Length L [mm]:	Weight [kg]:	Type:
22A3B7000	7000	9,51	Anode